EBARA EVMS(L)3 TRYCKSTEGRINGSPUMP

PERFORMANCE CURVE
EVMS(L)3

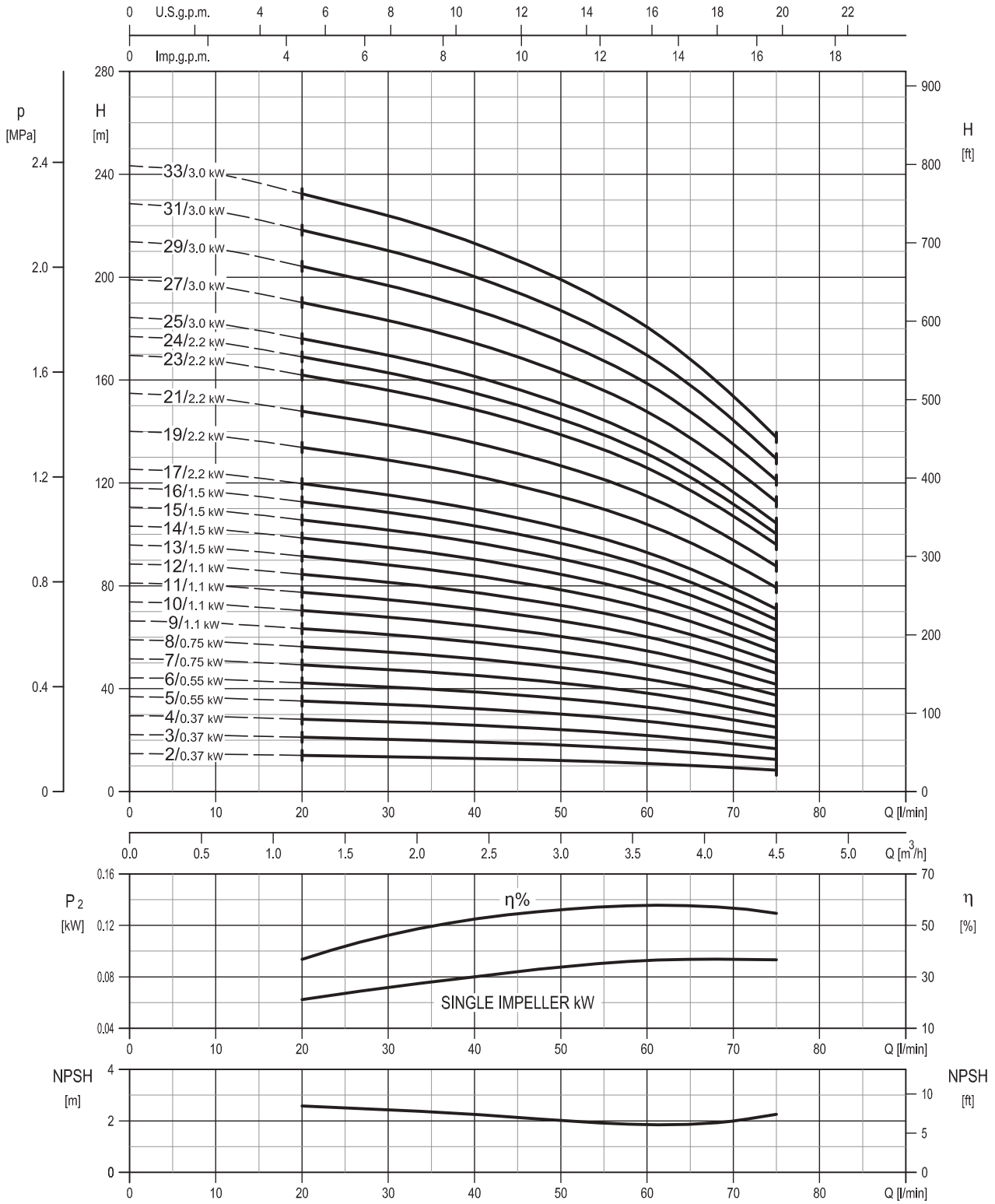

Rotation speed ≈2900 min^{-1}
Test standard: ISO 9906:2012 - Grade 3B

ScandiaPUMPS
Kabelgatan 7
434 37 KUNGSBACKA

w: www.scandiapumps.com
t: +46(0) 300 52 12 10
e: info@scandiapumps.com

EBARA EVMS(L)3 TRYCKSTEGRINGSPUMP

TECHNICAL DATA
EVMS(L)3

Dimensional sketch

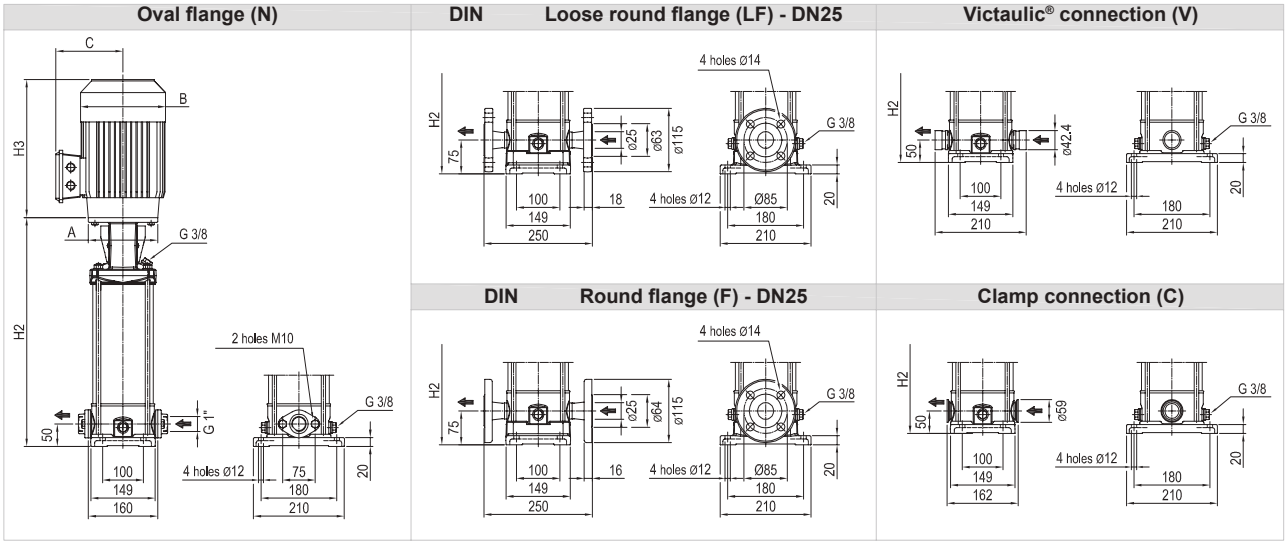

Dimensions [mm] and Weights [Kg]

Pump Type	Pmax [MPa]	Motor kW	Motor Size	Motor A	Motor 1~ B	Motor 1~ C	Motor 1~ H3	Motor 3~ B	Motor 3~ C	Motor 3~ H3	Oval flange (N) H2	Oval flange (N) Weight Pump	Oval flange (N) Weight Pump + Motor 1~	Oval flange (N) Weight Pump + Motor 3~	Loose round flange (LF) Round flange (F) H2	Loose round flange (LF) Round flange (F) Weight Pump	Loose round flange (LF) Round flange (F) Weight Pump + Motor 1~	Loose round flange (LF) Round flange (F) Weight Pump + Motor 3~	Victaulic® connection (V) Clamp connection (C) H2	Victaulic® connection (V) Clamp connection (C) Weight Pump	Victaulic® connection (V) Clamp connection (C) Weight Pump + Motor 1~	Victaulic® connection (V) Clamp connection (C) Weight Pump + Motor 3~
EVMS(L)3 2/0.37	1.6	0.37	71	ø105	139	133	216	139	114	216	250	9.7	16.8	15.5	275	10.5	17.6	16.3	250	9.7	16.8	15.5
EVMS(L)3 3/0.37	1.6	0.37	71	ø105	139	133	216	139	114	216	271	10.1	17.2	15.9	296	10.9	18	16.7	271	10.2	17.3	16
EVMS(L)3 4/0.37	1.6	0.37	71	ø105	139	133	216	139	114	216	292	10.6	17.7	16.4	317	11.3	18.4	17.1	292	10.6	17.7	16.4
EVMS(L)3 5/0.55	1.6	0.55	71	ø105	139	133	216	139	114	216	313	11	19.5	17.2	338	11.8	20.3	18	313	11.1	19.6	17.3
EVMS(L)3 6/0.55	1.6	0.55	71	ø105	139	133	216	139	114	216	334	11.4	19.9	17.6	359	12.2	20.7	18.4	334	11.5	20	17.7
EVMS(L)3 7/0.75	1.6	0.75	80	ø120	160	151	232	141	102	233	365	12.4	23.8	20.9	390	13.1	24.5	21.6	365	12.4	23.8	20.9
EVMS(L)3 8/0.75	1.6	0.75	80	ø120	160	151	232	141	102	233	386	12.8	24.2	21.3	411	13.6	25	22.1	386	12.9	24.3	21.4
EVMS(L)3 9/1.1	1.6	1.1	80	ø120	160	151	232	141	102	244	407	13.2	25	23.2	432	14	25.8	24	407	13.3	25.1	23.3
EVMS(L)3 10/1.1	1.6	1.1	80	ø120	160	151	232	141	102	244	428	13.7	25.5	23.7	453	14.5	26.3	24.5	428	13.7	25.5	23.7
EVMS(L)3 11/1.1	1.6	1.1	80	ø120	160	151	232	141	102	244	449	14.1	25.9	24.1	474	14.9	26.7	24.9	449	14.2	26	24.2
EVMS(L)3 12/1.1	1.6	1.1	80	ø120	160	151	232	141	102	244	470	14.6	26.4	24.6	495	15.4	27.2	25.4	470	14.6	26.4	24.6
EVMS(L)3 13/1.5	1.6	1.5	90	ø140	172	140	278	160	119	291	501	15.3	33.1	28.8	526	16.1	33.9	29.6	501	15.3	33.1	28.8
EVMS(L)3 14/1.5	1.6	1.5	90	ø140	172	140	278	160	119	291	522	15.7	33.5	29.2	547	16.5	34.3	30	522	15.8	33.6	29.3
EVMS(L)3 15/1.5	1.6	1.5	90	ø140	172	140	278	160	119	291	543	16.2	34	29.7	568	17	34.8	30.5	543	16.3	34.1	29.8
EVMS(L)3 16/1.5	1.6	1.5	90	ø140	172	140	278	160	119	291	564	17.3	35.1	30.8	589	18	35.8	31.5	564	17.3	35.1	30.8
EVMS(L)3 17/2.2	1.6	2.2	90	ø140	172	140	278	160	119	291	585	17.7	37.2	32.7	610	18.5	38	33.5	585	17.7	37.2	32.7
EVMS(L)3 19/2.2	1.6	2.2	90	ø140	172	140	278	160	119	291	627	18.7	38.2	33.7	652	19.5	39	34.5	627	18.7	38.2	33.7
EVMS(L)3 21/2.2	1.6	2.2	90	ø140	172	140	278	160	119	291	669	19.6	39.1	34.6	694	20.4	39.9	35.4	669	19.6	39.1	34.6
EVMS(L)3 23/2.2	2.5	2.2	90	ø140	172	140	278	160	119	291	-	-	-	-	736	21.4	40.9	36.4	711	20.6	40.1	35.6
EVMS(L)3 24/2.2	2.5	2.2	90	ø140	172	140	278	160	119	291	-	-	-	-	757	21.8	41.3	36.8	732	21.1	40.6	36.1
EVMS(L)3 25/3.0	2.5	3.0	100	ø160	-	-	-	176	123	342	-	-	-	-	788	22.4	-	44.4	763	21.7	-	43.7
EVMS(L)3 27/3.0	2.5	3.0	100	ø160	-	-	-	176	123	342	-	-	-	-	830	23.4	-	45.4	805	22.6	-	44.6
EVMS(L)3 29/3.0	2.5	3.0	100	ø160	-	-	-	176	123	342	-	-	-	-	872	24.3	-	46.3	847	23.6	-	45.6
EVMS(L)3 31/3.0	2.5	3.0	100	ø160	-	-	-	176	123	342	-	-	-	-	914	25.3	-	47.3	889	24.6	-	46.6
EVMS(L)3 33/3.0	2.5	3.0	100	ø160	-	-	-	176	123	342	-	-	-	-	956	26.1	-	48.1	931	25.4	-	47.4

1.6 MPa=16 bar ; 2.5 MPa=25 bar
- not available model

ScandiaPUMPS
Kabelgatan 7
434 37 KUNGSBACKA
w: www.scandiapumps.com
t: +46(0) 300 52 12 10
e: info@scandiapumps.com

EBARA EVMS(L)3 TRYCKSTEGRINGSPUMP

SECTIONAL VIEW
EVMS(L)3

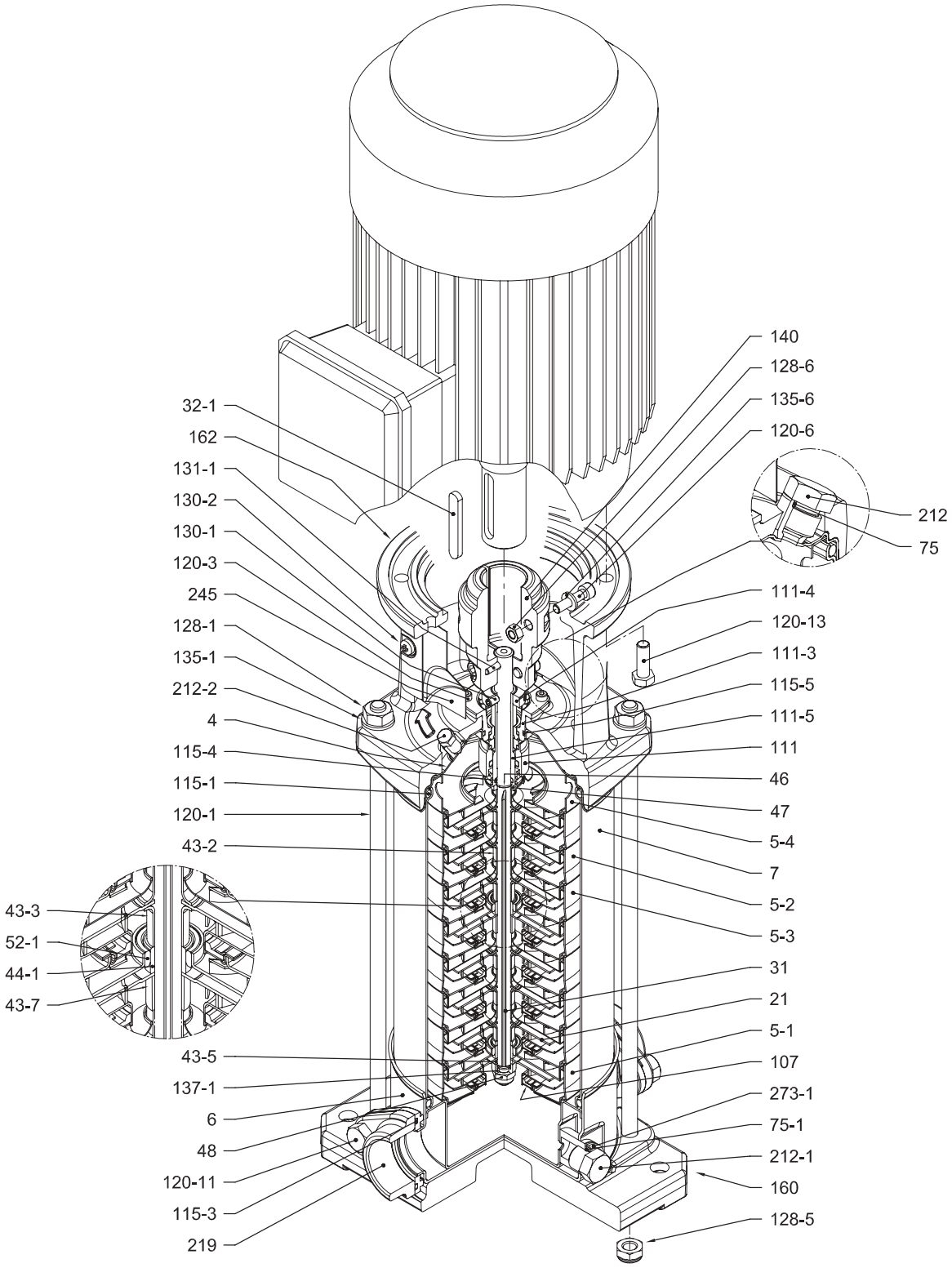

with Oval flange (N)

ScandiaPUMPS
Kabelgatan 7
434 37 KUNGSBACKA

w: www.scandiapumps.com
t: +46(0) 300 52 12 10
e: info@scandiapumps.com

EBARA EVMS(L)3 TRYCKSTEGRINGSPUMP

PIPE CONNECTION
EVMS(L)3

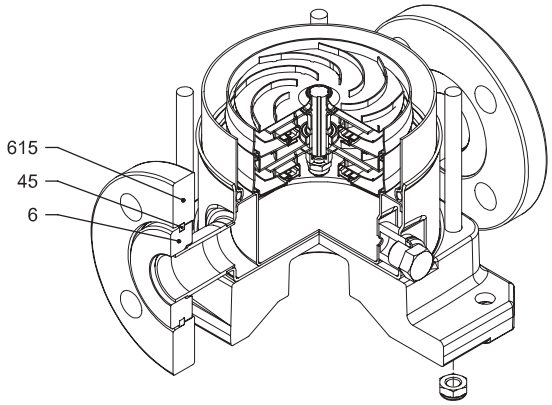

with Loose round flange (LF)

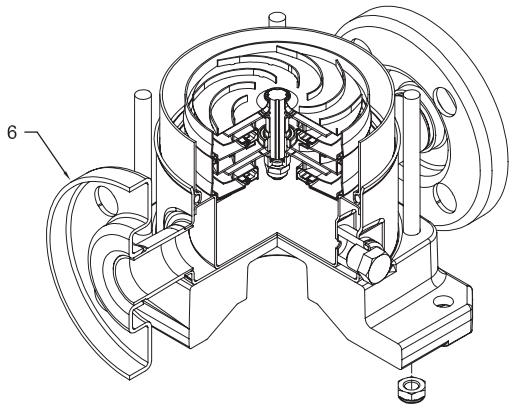

with Round flange (F)

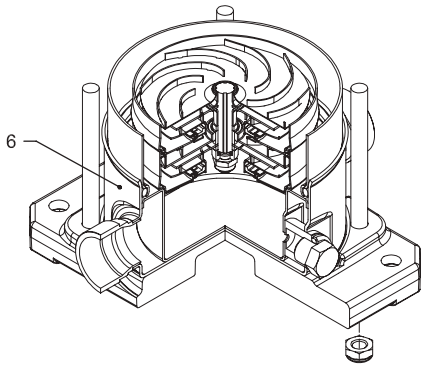

with Victaulic® connection (V)

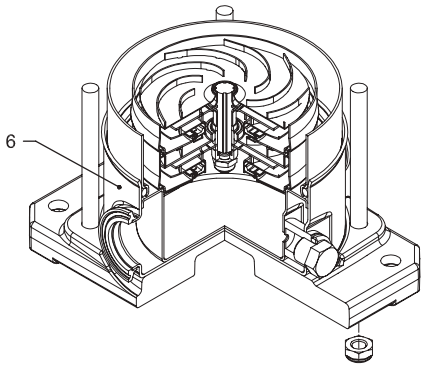

with Clamp connection (C)

© ScandiaPUMPS 2017
Med reservation för tryckfel
ScandiaPUMPS
Kabelgatan 7
434 37 KUNGSBACKA

w: www.scandiapumps.com
t: +46(0) 300 52 12 10
e: info@scandiapumps.com

EBARA EVMS(L)3 TRYCKSTEGRINGSPUMP

SECTIONAL TABLE
EVMS(L)3

N°	PART NAME	MATERIAL		DIMENSIONS	STANDARD
		EVMS	EVMSL		
4	Casing cover	EN 1.4301 (AISI 304)	EN 1.4404 (AISI 316L)		
5-1	Suction casing	EN 1.4301 (AISI 304)	EN 1.4404 (AISI 316L)		
5-2	Intermediate Casing	EN 1.4301 (AISI 304)	EN 1.4404 (AISI 316L)		
5-3	Intermediate casing bearing	EN 1.4301 (AISI 304)	EN 1.4404 (AISI 316L)		
5-4	Discharge casing	EN 1.4301 (AISI 304)	EN 1.4404 (AISI 316L)		
6	Bottom casing	EN 1.4301 (AISI 304)	EN 1.4404 (AISI 316L)		
7	Outer casing	EN 1.4301 (AISI 304)	EN 1.4404 (AISI 316L)		
21	Impeller	EN 1.4301 (AISI 304)	EN 1.4404 (AISI 316L)		
31	Shaft	EN 1.4301 (AISI 304)	EN 1.4404 (AISI 316L)		
32-1	Adjuster Key	EN 1.4301 (AISI 304)			
43-2	Shaft sleeve (intermediate)	EN 1.4301 (AISI 304)	EN 1.4404 (AISI 316L)		
43-3	Shaft sleeve (bearing)	EN 1.4301 (AISI 304)	EN 1.4404 (AISI 316L)		
43-5	Shaft sleeve (last stage)	EN 1.4301 (AISI 304)	EN 1.4404 (AISI 316L)		
43-7	Spacer	EN 1.4301 (AISI 304)	EN 1.4404 (AISI 316L)		
44-1	Shaft sleeve bearing	Tungsten carbide			
45	Flange holder	EN 1.4301 (AISI 304)			
46	Ring (mechanical seal)	EN 1.4404 (AISI 316L)			
47	Ring Holder	EN 1.4301 (AISI 304)	EN 1.4404 (AISI 316L)		
48	Impeller nut	A2-70 UNI 7323 with inox insert	A4-70 UNI 7323 with inox insert	M8	
52-1	Bearing	Tungsten carbide			
75	O-Ring (plug)	EPDM		D. 12.37x2.62	OR 3050
75-1	O-Ring (plug)	EPDM			
107	Liner ring	EN 1.4301 (AISI 304) + PPS	EN 1.4404 (AISI 316L) + PPS		
111	Mechanical Seal	SiC / Carbon / EPDM			
111-3	Mechanical seal seat	EN 1.4301 (AISI 304)	EN 1.4401 (AISI 316)		
111-4	Seal holder	EN 1.4301 (AISI 304)			
111-5	Mechanical seal cartridge	EN 1.4301 (AISI 304)	EN 1.4404 (AISI 316L)		
115-1	O-Ring (outer casing)	EPDM		D. 129.54x5.34	OR 6510
115-3	O-Ring	EPDM			
115-4	O-Ring (cartridge sleeve)	EPDM		D. 11.91x2.62	OR 115
115-5	O-Ring (seal cover)	EPDM		D. 32.99x2.62	OR 3131
120-1	Tie-rod	Galvanized steel 6.8 strenght class ISO 898/1		M10	
120-3	Screw	A2-70 UNI 7323		M4x10	ISO 4762
120-6	Screw for coupling	Galvanized steel		M6x25	ISO 4762
120-11	Screw for counterflange	A2-70 UNI 7323			
120-13	Screw for motor MEC 71-80	Galvanized steel 8.8 strenght class ISO 898/1		M6x20	ISO 4017
	Screw for motor MEC 90-100			M8x20	ISO 4017
128-1	Nut for tie rod	Galvanized steel		M10	UNI 5588
128-5	Nut for tie rod	A2-70 UNI 7323		M10	UNI 7474
128-6	Nut for coupling	Galvanized steel		M6	ISO 4032
130-1	Set screw	A2-70 UNI 7323		M5x8	UNI 5923
130-2	Screw for coupling guard	A2-70 UNI 7323		M5x6	UNI 7687
131-1	Pin for shaft	Carbon Steel		D.4x32	UNI 4838
135-1	Washer	Galvanized steel		D. 10.5x21x2	UNI 6592
135-6	Washer	Carbon Steel		Ø6	
137-1	Impeller spacer	EN 1.4301 (AISI 304)	EN 1.4404 (AISI 316L)		
140	Coupling up to 4.0 kW	Die cast Aluminium EN AB-AISI11Cu2 (Fe)			
160	Base	Die cast Aluminium EN AB-AISI11Cu2 (Fe)			
162	Motor bracket	Cast iron EN-GJL-200-EN 1561			
212	Plug	EN 1.4301 (AISI 304)	EN 1.4404 (AISI 316L)	G 3/8	
212-1	Plug	EN 1.4301 (AISI 304)	EN 1.4404 (AISI 316L)	G 3/8	
212-2	Venting plug	EN 1.4404 (AISI 316L)			
219	Counter flange	EN 1.4301 (AISI 304)	EN 1.4404 (AISI 316L)		
245	Coupling guard	EN 1.4301 (AISI 304)			
273-1	Plug Washer	EN 1.4301 (AISI 304)	EN 1.4404 (AISI 316L)		
615	Flange	Nodular Cast Iron			

© ScandiaPUMPS 2017
Med reservation för tryckfel
ScandiaPUMPS
Kabelgatan 7
434 37 KUNGSBACKA
w: www.scandiapumps.com
t: +46(0) 300 52 12 10
e: info@scandiapumps.com

EBARA EVMS(L)3 TRYCKSTEGRINGSPUMP

QUANTITY FOR MODEL EVMS(L)3

Pump Type	N°																														
	4	5-1	5-2	5-3	5-4	6	7	21	31	32-1	43-2	43-3	43-5	43-7	44-1	45**	46	47	48	52-1	75	75-1	107	111	111-3	111-4	111-5	115-1	115-3*	115-4	115-5
EVMS(L)3 2/0.37	1	1	/	1	1	1	1	2	1	1	1	1	/	/	1	4	2	1	1	1	1	2	2	1	1	1	1	2	2	1	1
EVMS(L)3 3/0.37	1	1	1	1	1	1	1	3	1	1	3	1	/	/	1	4	2	1	1	1	1	2	3	1	1	1	1	2	2	1	1
EVMS(L)3 4/0.37	1	1	2	1	1	1	1	4	1	1	5	1	/	/	1	4	2	1	1	1	1	2	4	1	1	1	1	2	2	1	1
EVMS(L)3 5/0.55	1	1	3	1	1	1	1	5	1	1	7	1	1	/	1	4	2	1	1	1	1	2	5	1	1	1	1	2	2	1	1
EVMS(L)3 6/0.55	1	1	4	1	1	1	1	6	1	1	9	1	/	/	1	4	2	1	1	1	1	2	6	1	1	1	1	2	2	1	1
EVMS(L)3 7/0.75	1	1	5	1	1	1	1	7	1	1	11	1	/	/	1	4	2	1	1	1	1	2	7	1	1	1	1	2	2	1	1
EVMS(L)3 8/0.75	1	1	6	1	1	1	1	8	1	1	13	1	/	/	1	4	2	1	1	1	1	2	8	1	1	1	1	2	2	1	1
EVMS(L)3 9/1.1	1	1	7	1	1	1	1	9	1	1	15	1	1	/	1	4	2	1	1	1	1	2	9	1	1	1	1	2	2	1	1
EVMS(L)3 10/1.1	1	1	8	1	1	1	1	10	1	1	17	1	/	/	1	4	2	1	1	1	1	2	10	1	1	1	1	2	2	1	1
EVMS(L)3 11/1.1	1	1	9	1	1	1	1	11	1	1	19	1	/	/	1	4	2	1	1	1	1	2	11	1	1	1	1	2	2	1	1
EVMS(L)3 12/1.1	1	1	10	1	1	1	1	12	1	1	21	1	/	/	1	4	2	1	1	1	1	2	12	1	1	1	1	2	2	1	1
EVMS(L)3 13/1.5	1	1	10	2	1	1	1	13	1	1	20	2	1	1	2	4	2	1	1	2	1	2	13	1	1	1	1	2	2	1	1
EVMS(L)3 14/1.5	1	1	11	2	1	1	1	14	1	1	22	2	/	1	2	4	2	1	1	2	1	2	14	1	1	1	1	2	2	1	1
EVMS(L)3 15/1.5	1	1	12	2	1	1	1	15	1	1	24	2	/	1	2	4	2	1	1	2	1	2	15	1	1	1	1	2	2	1	1
EVMS(L)3 16/1.5	1	1	13	2	1	1	1	16	1	1	26	2	/	1	2	4	2	1	1	2	1	2	16	1	1	1	1	2	2	1	1
EVMS(L)3 17/2.2	1	1	14	2	1	1	1	17	1	1	28	2	1	1	2	4	2	1	1	2	1	2	17	1	1	1	1	2	2	1	1
EVMS(L)3 19/2.2	1	1	16	2	1	1	1	19	1	1	32	2	/	1	2	4	2	1	1	2	1	2	19	1	1	1	1	2	2	1	1
EVMS(L)3 21/2.2	1	1	18	2	1	1	1	21	1	1	36	2	1	1	2	4	2	1	1	2	1	2	21	1	1	1	1	2	2	1	1
EVMS(L)3 23/2.2	1	1	20	2	1	1	1	23	1	1	40	2	/	1	2	4	2	1	1	2	1	2	23	1	1	1	1	2	/	1	1
EVMS(L)3 24/2.2	1	1	21	2	1	1	1	24	1	1	42	2	/	1	2	4	2	1	1	2	1	2	24	1	1	1	1	2	/	1	1
EVMS(L)3 25/3.0	1	1	22	2	1	1	1	25	1	1	44	2	/	1	2	4	2	1	1	2	1	2	25	1	1	1	1	2	/	1	1
EVMS(L)3 27/3.0	1	1	24	2	1	1	1	27	1	1	48	2	/	1	2	4	2	1	1	2	1	2	27	1	1	1	1	2	/	1	1
EVMS(L)3 29/3.0	1	1	26	2	1	1	1	29	1	1	52	2	/	1	2	4	2	1	1	2	1	2	29	1	1	1	1	2	/	1	1
EVMS(L)3 31/3.0	1	1	28	2	1	1	1	31	1	1	56	2	/	1	2	4	2	1	1	2	1	2	31	1	1	1	1	2	/	1	1
EVMS(L)3 33/3.0	1	1	30	2	1	1	1	33	1	1	60	2	/	1	2	4	2	1	1	2	1	2	33	1	1	1	1	2	/	1	1

Pump Type	N°																							
	120-1	120-3	120-6	120-11*	120-13	128-1	128-5	128-6	130-1	130-2	131-1	135-1	135-6	137-1	140	160	162	212	212-1	212-2	219*	245	273-1	615**
EVMS(L)3 2/0.37	4	4	4	4	4	4	4	4	3	4	1	4	4	1	2	1	1	1	2	1	2	2	2	2
EVMS(L)3 3/0.37	4	4	4	4	4	4	4	4	3	4	1	4	4	1	2	1	1	1	2	1	2	2	2	2
EVMS(L)3 4/0.37	4	4	4	4	4	4	4	4	3	4	1	4	4	1	2	1	1	1	2	1	2	2	2	2
EVMS(L)3 5/0.55	4	4	4	4	4	4	4	4	3	4	1	4	4	1	2	1	1	1	2	1	2	2	2	2
EVMS(L)3 6/0.55	4	4	4	4	4	4	4	4	3	4	1	4	4	1	2	1	1	1	2	1	2	2	2	2
EVMS(L)3 7/0.75	4	4	4	4	4	4	4	4	3	4	1	4	4	1	2	1	1	1	2	1	2	2	2	2
EVMS(L)3 8/0.75	4	4	4	4	4	4	4	4	3	4	1	4	4	1	2	1	1	1	2	1	2	2	2	2
EVMS(L)3 9/1.1	4	4	4	4	4	4	4	4	3	4	1	4	4	1	2	1	1	1	2	1	2	2	2	2
EVMS(L)3 10/1.1	4	4	4	4	4	4	4	4	3	4	1	4	4	1	2	1	1	1	2	1	2	2	2	2
EVMS(L)3 11/1.1	4	4	4	4	4	4	4	4	3	4	1	4	4	1	2	1	1	1	2	1	2	2	2	2
EVMS(L)3 12/1.1	4	4	4	4	4	4	4	4	3	4	1	4	4	1	2	1	1	1	2	1	2	2	2	2
EVMS(L)3 13/1.5	4	4	4	4	4	4	4	4	3	4	1	4	4	1	2	1	1	1	2	1	2	2	2	2
EVMS(L)3 14/1.5	4	4	4	4	4	4	4	4	3	4	1	4	4	1	2	1	1	1	2	1	2	2	2	2
EVMS(L)3 15/1.5	4	4	4	4	4	4	4	4	3	4	1	4	4	1	2	1	1	1	2	1	2	2	2	2
EVMS(L)3 16/1.5	4	4	4	4	4	4	4	4	3	4	1	4	4	1	2	1	1	1	2	1	2	2	2	2
EVMS(L)3 17/2.2	4	4	4	4	4	4	4	4	3	4	1	4	4	1	2	1	1	1	2	1	2	2	2	2
EVMS(L)3 19/2.2	4	4	4	4	4	4	4	4	3	4	1	4	4	1	2	1	1	1	2	1	2	2	2	2
EVMS(L)3 21/2.2	4	4	4	4	4	4	4	4	3	4	1	4	4	1	2	1	1	1	2	1	2	2	2	2
EVMS(L)3 23/2.2	4	4	4	/	4	4	4	4	3	4	1	4	4	1	2	1	1	1	2	1	/	2	2	2
EVMS(L)3 24/2.2	4	4	4	/	4	4	4	4	3	4	1	4	4	1	2	1	1	1	2	1	/	2	2	2
EVMS(L)3 25/3.0	4	4	4	/	4	4	4	4	3	4	1	4	4	1	2	1	1	1	2	1	/	2	2	2
EVMS(L)3 27/3.0	4	4	4	/	4	4	4	4	3	4	1	4	4	1	2	1	1	1	2	1	/	2	2	2
EVMS(L)3 29/3.0	4	4	4	/	4	4	4	4	3	4	1	4	4	1	2	1	1	1	2	1	/	2	2	2
EVMS(L)3 31/3.0	4	4	4	/	4	4	4	4	3	4	1	4	4	1	2	1	1	1	2	1	/	2	2	2
EVMS(L)3 33/3.0	4	4	4	/	4	4	4	4	3	4	1	4	4	1	2	1	1	1	2	1	/	2	2	2

* only for Oval flange (N)
** only for Loose round flange (LF)

ScandiaPUMPS
Kabelgatan 7
434 37 KUNGSBACKA

w: www.scandiapumps.com
t: +46(0) 300 52 12 10
e: info@scandiapumps.com